velleman® HIGH-Q -kit

57mm 7-SEGMENT DIGITAL CLOCK

Large 57mm clock & temperature display with extra unique feature

Total solder points: 263
Difficulty level: *beginner* 1 ☐ 2 ☐ 3 ☐ 4 ☐ 5 ☒ *advanced*

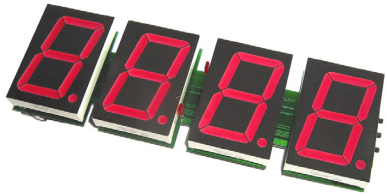

K8089

ILLUSTRATED ASSEMBLY MANUAL H8089IP-1

Features :

- ☑ 12/24h clock system
- ☑ min temp readout:
  - celsius: -20°C
  - fahrenheit: -4°F
- ☑ max temp readout:
  - celsius: 70°C
  - fahrenheit: 158°F
- ☑ auto toggle function
- ☑ easy time setting
- ☑ easy wall mounting
- ☑ back-up battery
- ☑ automatic frequency detection
- ☑ unique extra feature: auto toggle between time/temp and scrolling sign 'OPEN' or 'CLOSED'

Specifications

- power supply: 12VAC (e.g. PS1205AC)
- power consumption: 250mA max. (incl. temp. sensor*)
- backup battery: 3V (CR2032)
- power consumption on backup battery: +/-1mA
- dimensions: 230x74x32mm / 9 x 2.9 x 1.25"

* **optional :** temperature sensor K8067 or VM132

1. Assembly (Skipping this can lead to troubles !)
Ok, so we have your attention. These hints will help you to make this project successful. Read them carefully.

1.1 Make sure you have the right tools:

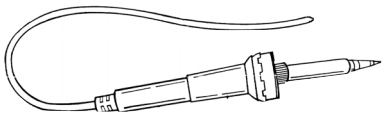

- A good quality soldering iron (25-40W) with a small tip.

- Wipe it often on a wet sponge or cloth, to keep it clean; then apply solder to the tip, to give it a wet look. This is called 'thinning' and will protect the tip, and enables you to make good connections. When solder rolls off the tip, it needs cleaning.

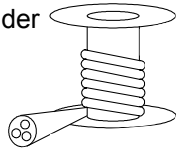

- Thin raisin-core solder. Do not use any flux or grease.

- A diagonal cutter to trim excess wires. To avoid injury when cutting excess leads, hold the lead so they cannot fly towards the eyes.

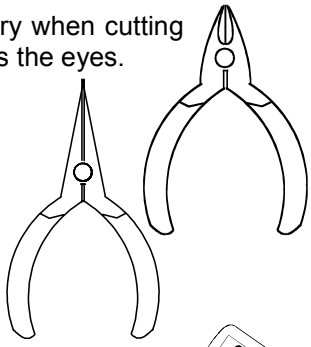

- Needle nose pliers, for bending leads, or to hold components in place.

- Small blade and Phillips screwdrivers. A basic range is fine.

For some projects, a basic multi-meter is required, or might be handy

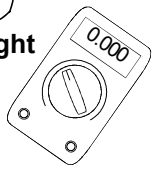

1.2 Assembly Hints :

⇒ Make sure the skill level matches your experience, to avoid disappointments.
⇒ Follow the instructions carefully. Read and understand the entire step before you perform each operation.
⇒ Perform the assembly in the correct order as stated in this manual
⇒ Position all parts on the PCB (Printed Circuit Board) as shown on the drawings.
⇒ Values on the circuit diagram are subject to changes.
⇒ Values in this assembly guide are correct*

⇒ Use the check-boxes to mark your progress.
⇒ Please read the included information on safety and customer service

* Typographical inaccuracies excluded. Always look for possible last minute manual updates, indicated as 'NOTE' on a separate leaflet.

1.3 Soldering Hints :

1- Mount the component against the PCB surface and carefully solder the leads

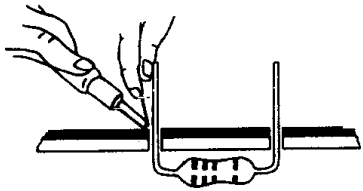

2- Make sure the solder joints are cone-shaped and shiny

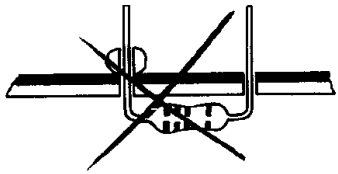

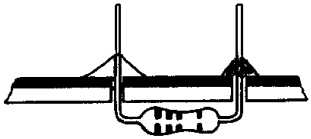

3- Trim excess leads as close as possible to the solder joint

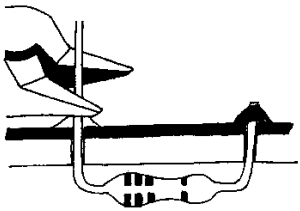

AXIAL COMPONENTS ARE TAPED IN THE CORRECT MOUNTING SEQUENCE !

REMOVE THEM FROM THE TAPE ONE AT A TIME !

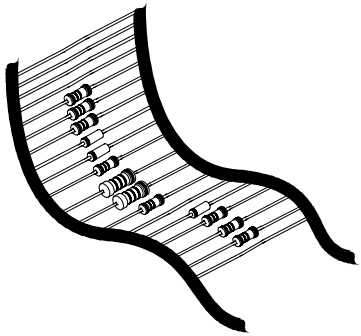

Hint: if you want the mount the clock against a wall, you can use the unstuffed PCB as a template to mark the drill holes.

1. Resistors.

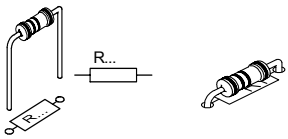

Hint: resistors can be soldered at component side of the board.

- ❑ R1 : 100K (1 - 0 - 4 - B)
- ❑ R2 : 10 (1 - 0 - 0 - B)
- ❑ R3 : 22K (2 - 2 - 3 - B)
- ❑ R4 : 22K (2 - 2 - 3 - B)
- ❑ R5 : 240 (2 - 4 - 0 - 0 - 1)
- ❑ R6 ... R37 : 220 (2 - 2 - 1 - B) **!**
- ❑ R38 : 1K (1 - 0 - 2 - B)
- ❑ R39 ... R42 : 10K (1 - 0 - 3 - B) **!**
- ❑ R44 : 220 (2 - 2 - 1 - B)
- ❑ R45 : 2K2 (2 - 2 - 2 - B)
- ❑ R46 : 10K (1 - 0 - 3 - B)

2. Diodes (check the polarity)

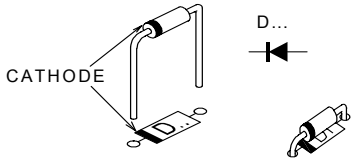

- ❑ D1 : 1N4007
- ❑ D2 : 1N4007
- ❑ D3 : 1N4007
- ❑ D4 : 1N4007
- ❑ D5 : BAT85
- ❑ D6 : BAT85
- ❑ D7 : 1N4148

3. Zener diodes (check the polarity)

- ❑ ZD1 : 4V3
- ❑ ZD2 : 4V3
- ❑ ZD2 : 4V3
- ❑ ZD3 : 4V3

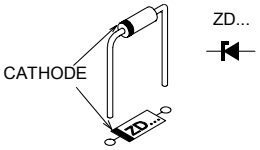

4. IC sockets. Watch the position of the notch!

- ❑ IC1 : 14p
- ❑ IC2 : 16p
- ❑ IC3 : 16p
- ❑ IC4 : 16p
- ❑ IC5 : 16p

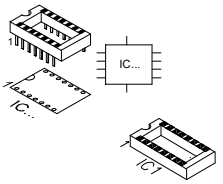

5. Capacitors

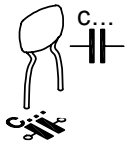

- ❑ C1 ... C11 : 100nF (104)
- ❑ C13 : 100nF (104)

6. Switches

Hint: mount a screw connector if remote selection is needed, see step 12.

- ❑ SW1 : Open / closed

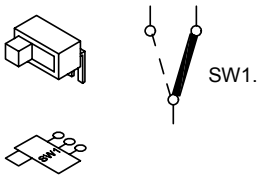

7. Transistors

❑ T1 : BC547
❑ T2 : BC547

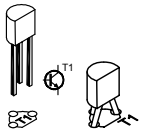

8. Voltage regulator

❑ VR1: UA7808

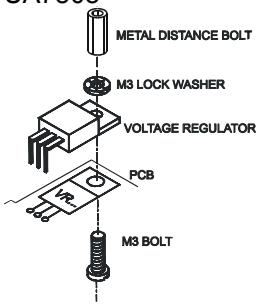

❑ VR2: UA78L05

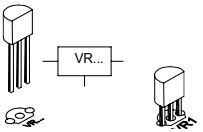

9. Battery holder

❑ E1 : CR2032 (3V)

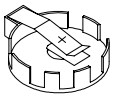

10. Push buttons

❑ SW2 : Sign on/off
❑ SW3 : Hours +
❑ SW4 : Minutes +

11. Pinheaders

2pins:

❑ SK3 : 12h/24h
❑ SK4 : °C/°F
❑ SK5 : Clock/clock+temp

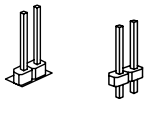

3pins:

❑ hh:mm / hh.mm

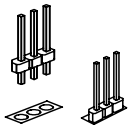

12. Terminal blocks

❑ SK1 : 2p power 12VAC
❑ SK2 : 3p Temp. sensor

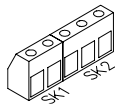

! ***If remote selection is needed :***

❑ SW1 :2p Open/closed

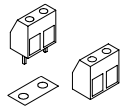

13. Electrolytic capacitor. Watch the polarity !

❑ C12 : 470µF / 25V

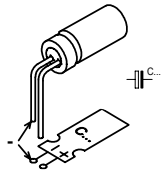

14. Heat sink

Make sure that the heat sink does not touch C12 !

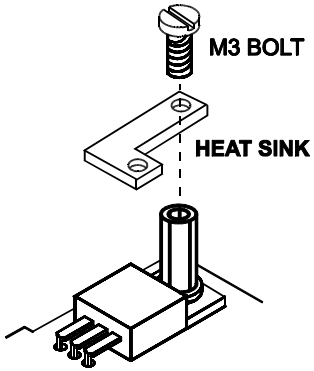

15. IC's. Watch the position of the notch!

❑ IC1 : VK8089
(programmed PIC16F630-I/P)
❑ IC2 : 74HC595
❑ IC3 : 74HC595
❑ IC4 : 74HC595
❑ IC5 : 74HC595

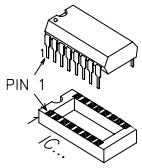

MOUNT THESE COMPONENTS ON THE PCB SOLDERSIDE, SOLDER THEM ON THE COMPONENTS SIDE

1. Tulip pin headers

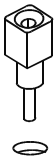

- ❑ DY1 : 2 x 5pins
- ❑ DY2 : 2 x 5pins
- ❑ DY3 : 2 x 5pins
- ❑ DY4 : 2 x 5pins

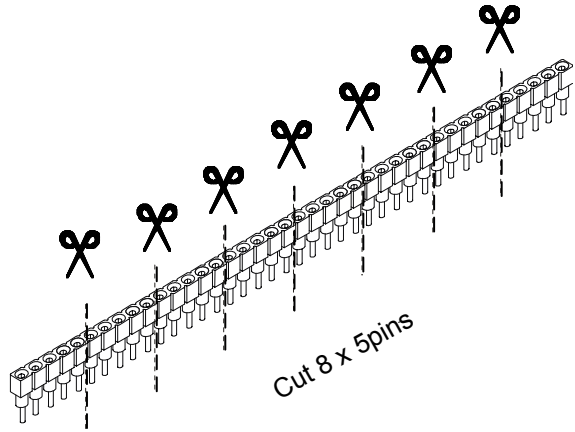

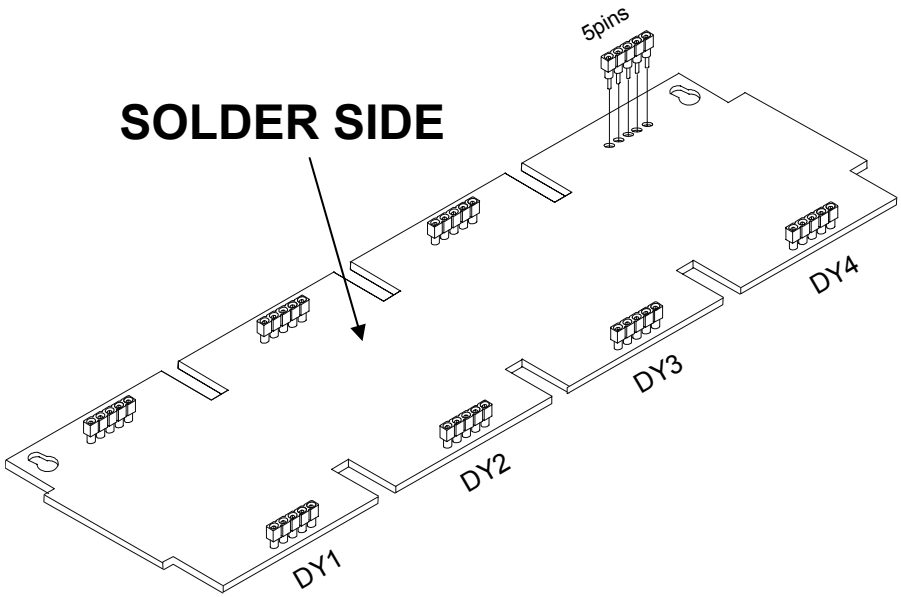

2. Digit displays

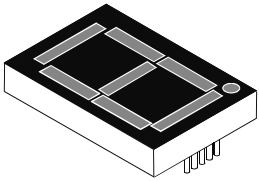

- ❑ DY1
- ❑ DY2
- ❑ DY3
- ❑ DY4

ATTENTION: mount the displays so that the dot is mounted towards the push button.

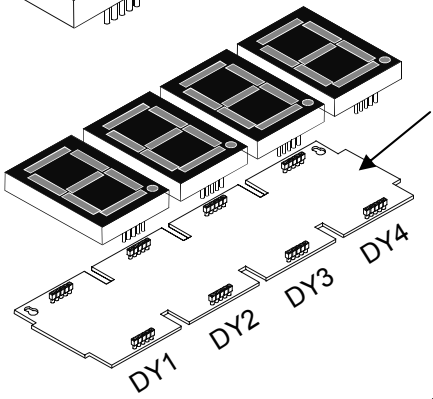

Side with push buttons

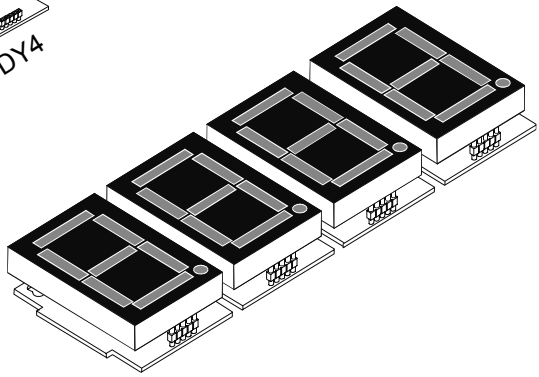

Make sure that all displays are correctly mounted !

3. Assembly of the enclosure

1 Mount the leds, watch the polarity.

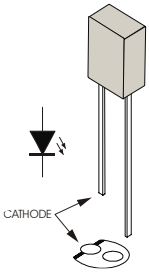

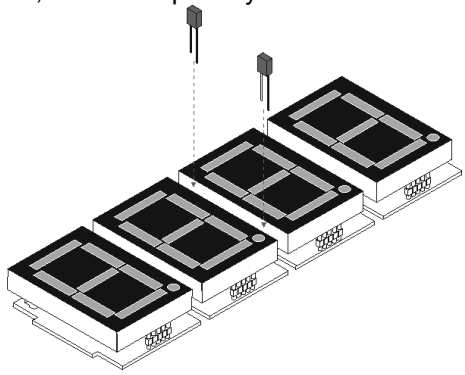

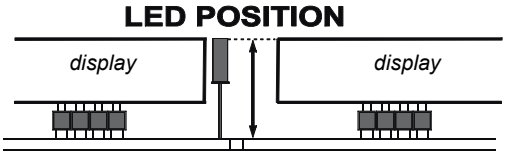

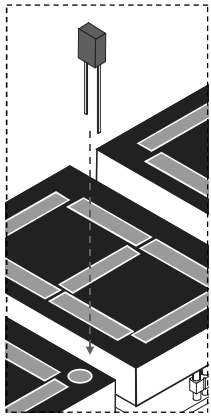

4. Test and connection

1. **Power supply:**

   Supply 9-12VAC to the inputs marked '12VAC'.

   - Make sure supply can deliver 300mA
   - Make sure to use an AC power supply. If you supply a DC voltage, the accuracy of the clock will be 5% worst case.

2. **Back-up battery:**

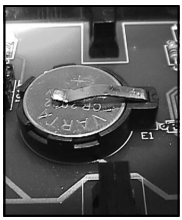

Insert a 3V CR2032 battery in the battery holder. If power fails, unit will retain the clock. Display will remain blank.

Note: Accuracy when running on backup battery: 5% worst case. Consumption: +/- 1mA

CHECK IF THE CLOCK IS WORKING CORRECTLY (see page 13)

5. Optional temperature sensor

If you have ordered an additional temperature sensor K8067 or VM132 then you can let the temperature automatic toggle with the time and sign.

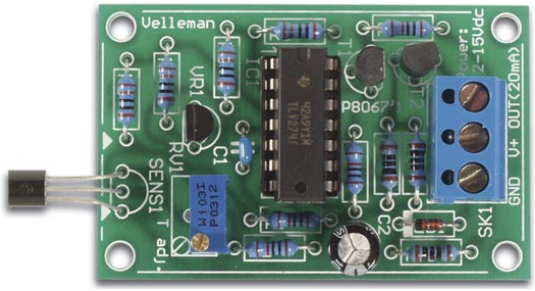

Optional temperature sensor

Connect the terminals marked GND, V+ and IN to the corresponding terminals of the temperature sensor. As this is a current loop sensor, you can run several meters of wire between the sensor and the clock.

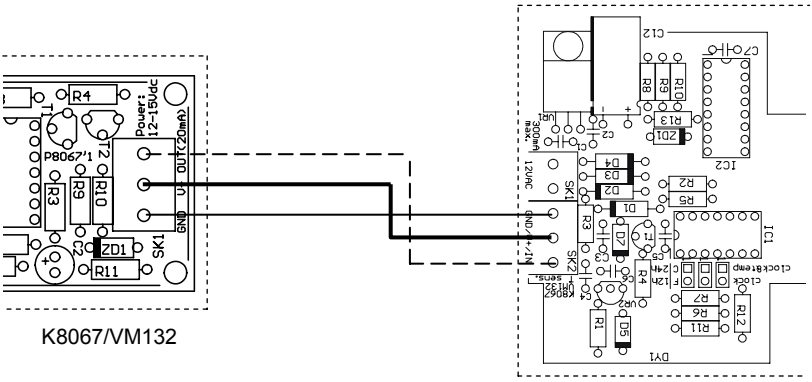

K8067/VM132

K8089

Adjusting the temperature sensor (Skip this if there is no temp. sensor connected. In this case, make sure jumper is set to 'clock').

Put a reliable thermometer next to the temperature sensor and leave it there for a while. Press and hold 'Min'-button and apply power to the unit. The unit will display the temperature only (Make sure back-up battery is removed)
Adjust the multiturn pot. (RV1) on the temperature sensor until the displayed temperature matches the temperature indicated by the thermometer.
Remove and re-apply power to restart the clock. If necessary, insert backup battery.

6. Jumper settings

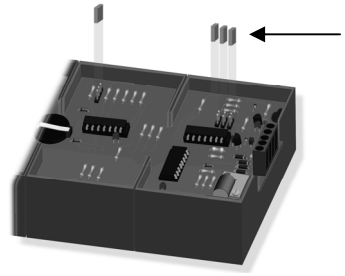

Use the shunt to select for choosing the display, temperature en time readout.

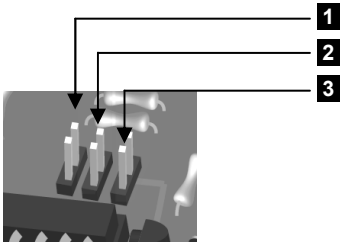

Mode	Jumper placed 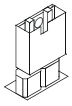	Jumper removed 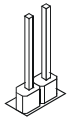
Display	clock	clock / temperature
Temp	°F	°C
Time	12h	24h

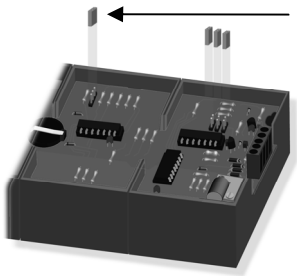

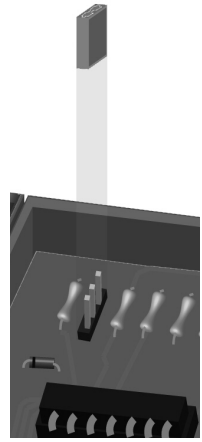

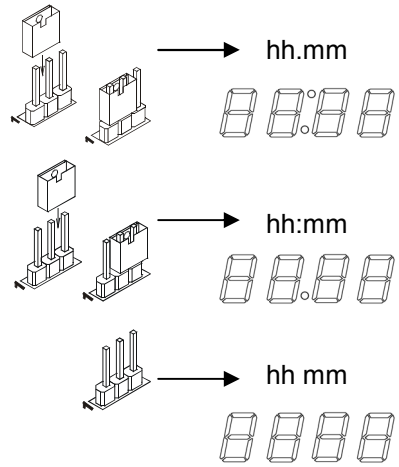

7. Assembly in enclosure

1 Assemble the 4 individual housing together.

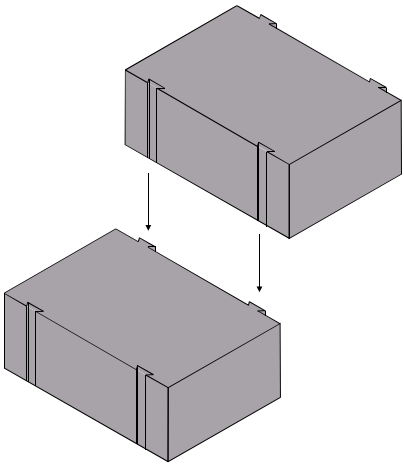

2 Turn the PCB around with the displays on top, place the enclosure on the PCB.

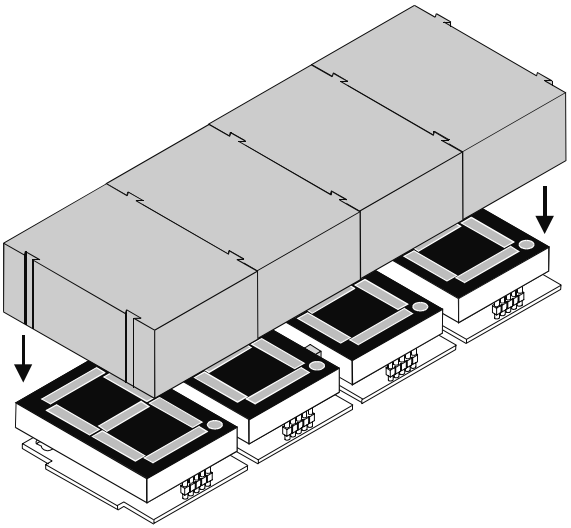

8. Use

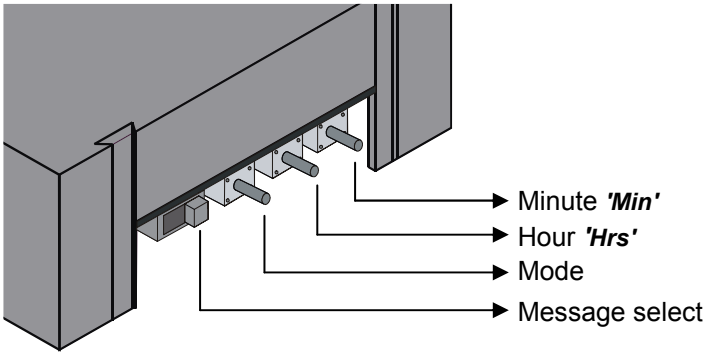

1. **Use as thermometer only (no clock):**

Hold 'Min'-button and apply power. Unit will display temperature only. If required, you can permanently bridge the 'Min'-button.

2. **Setting the time:**

Select 12h or 24h readout by means of the jumper. Press 'Hrs' to set the hours, press 'Min' to set minutes. At release, seconds will start from zero.

3. **Turning on/off the 'OPEN'/'CLOSED' display.**

Press 'Mode' to toggle between 'ON' (show sign) and 'OFF' (do not show sign).

Selecting 'OPEN'/'CLOSED'. The slide switch allows you to display either 'OPEN' or 'CLOSED'. You can remove the slide switch and replace it by the supplied screw connector.

By doing so you can easily put an optional switch in a remote location, to select between 'OPEN' or 'CLOSED'.

4. **Extra feature:**

Hold 'Hrs'-button and apply power (make sure to remove backup battery first). Now, the unit displays the approx. AC grid frequency. If required, you can permanently bridge the 'Hrs'-button.

PCB

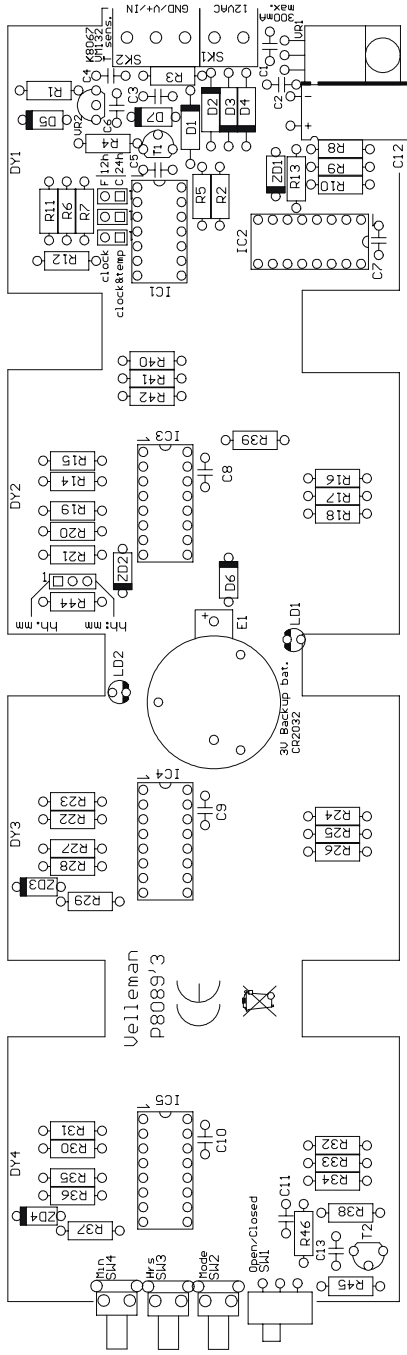
GND/V+/IN
12VAC
300mA max.
VR1
SK1
SK2
K8067 M132 sens.
C1
C2
C3
C4
C5
C6
C7
C8
C9
C10
C11
C12
C13
R1
R2
R3
R4
R5
R6
R7
R8
R9
R10
R11
R12
R13
R14
R15
R16
R17
R18
R19
R20
R21
R22
R23
R24
R25
R26
R27
R28
R29
R30
R31
R32
R33
R34
R35
R36
R37
R38
R39
R40
R41
R42
R44
R45
R46
D1
D2
D3
D4
D5
D6
D7
T1
T2
ZD1
ZD2
ZD3
ZD4
VR2
IC1
IC2
IC3
IC4
IC5
DY1
DY2
DY3
DY4
F 12h
C 24h
clock
clock&temp
E1
LD1
LD2
3V Backup bat. CR2032
hh.mm
hh:mm
Velleman P8089'3
Min SW4
Hrs SW3
Mode SW2
Open/Closed SW1

Schematic diagram

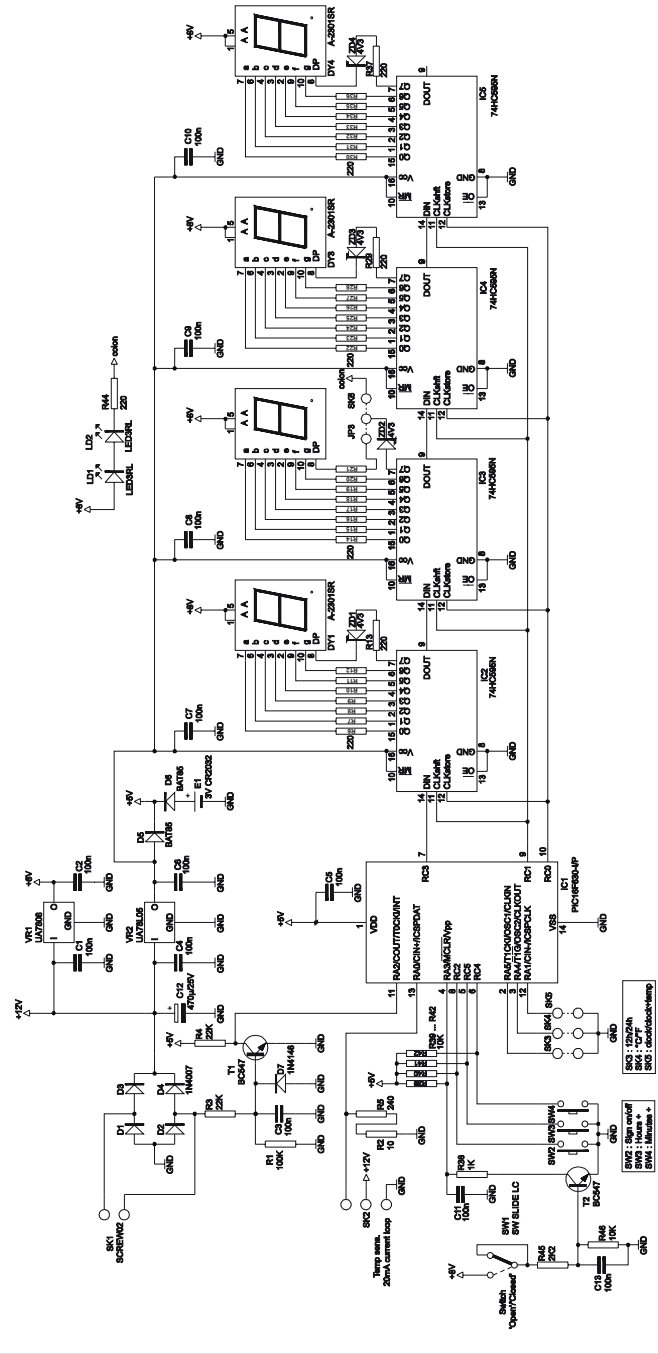

VELLEMAN KIT NV
Legen Heirweg 33
9890 Gavere
Belgium Europe
Info ?: http://www.velleman.be

Modifications and typographical errors reserved
© Velleman Kit nv
H8089IP - 2009 (rev.1)
5 410329 403188